Access Point WiFi 6 In-Wall

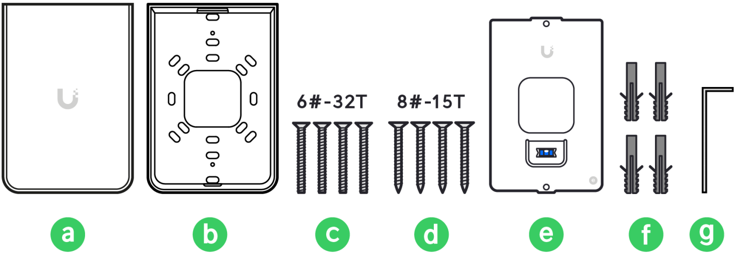
6#-32T
8#-15T
a
b
c
d
e
f
g

1

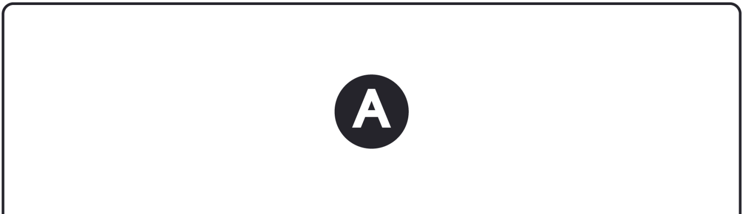

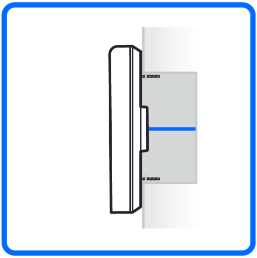

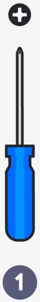

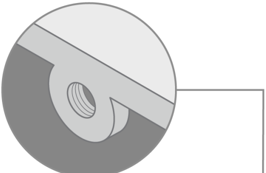

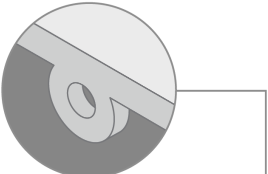

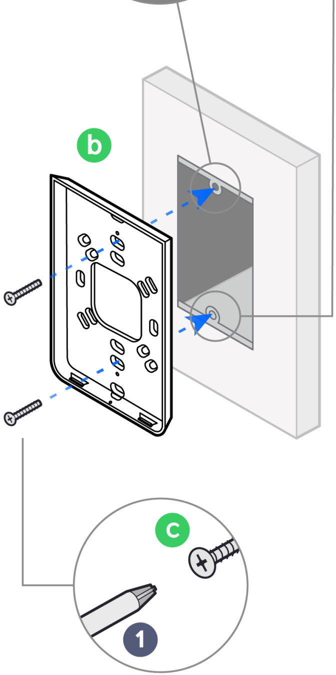

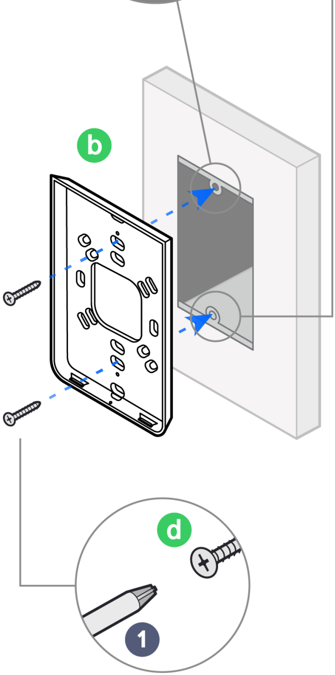

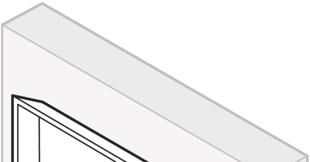

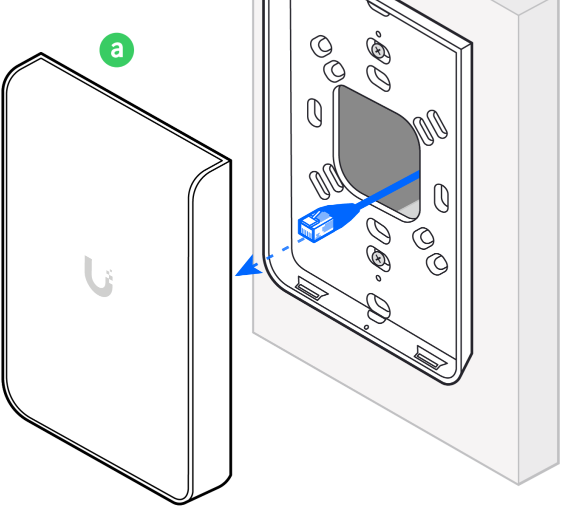

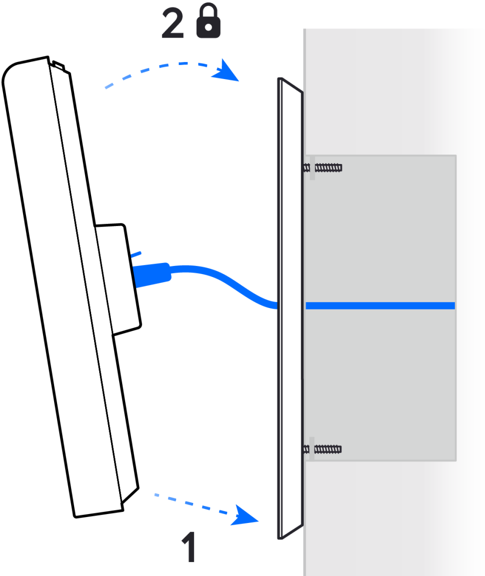

B

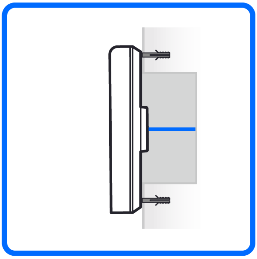

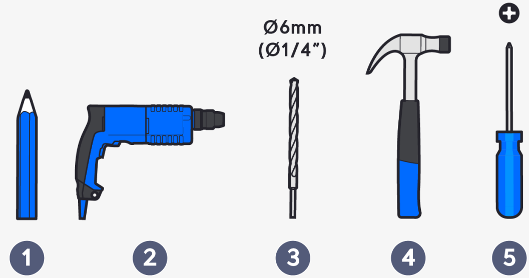
Ø6mm
(Ø1/4”)
1
2
3
4
5

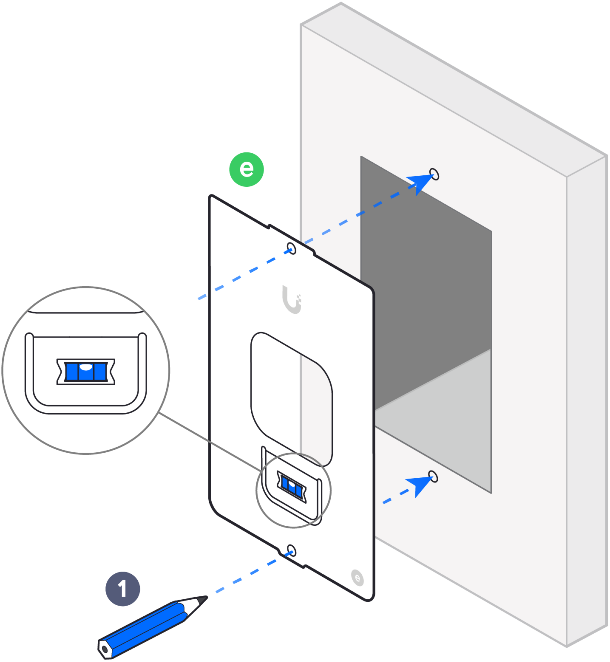

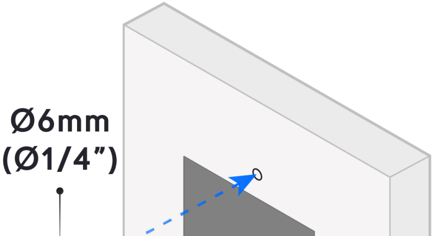

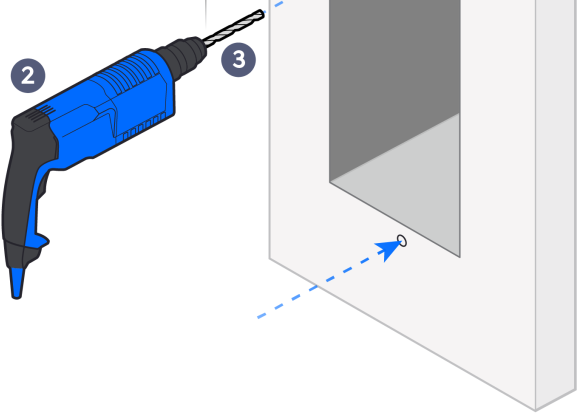

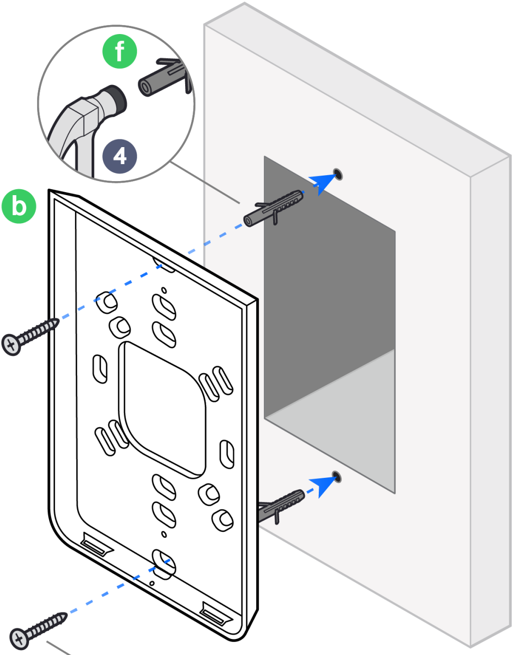

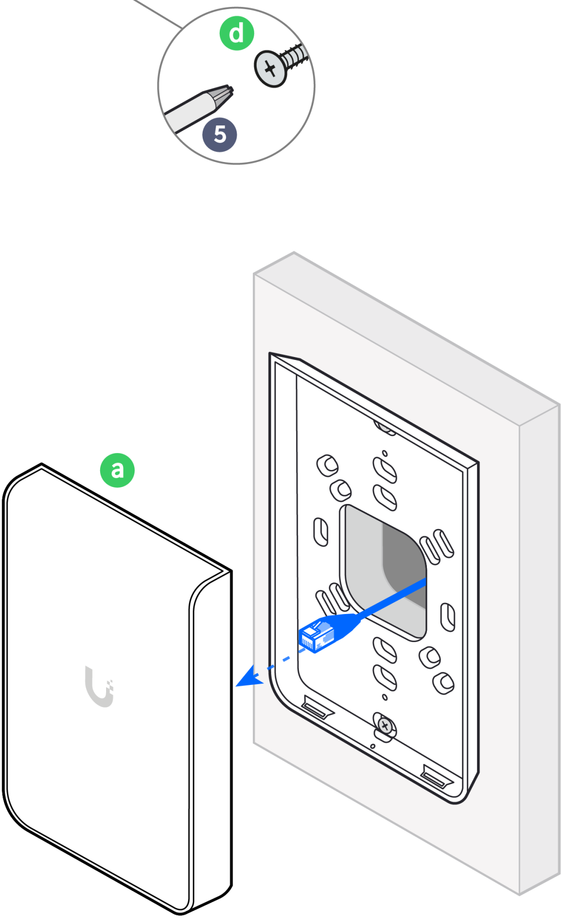

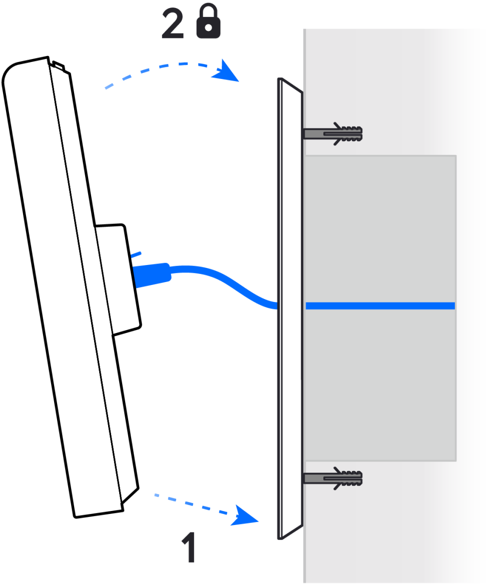

C

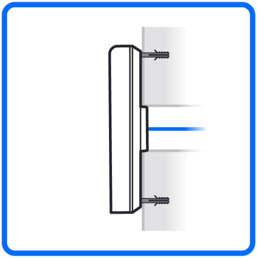

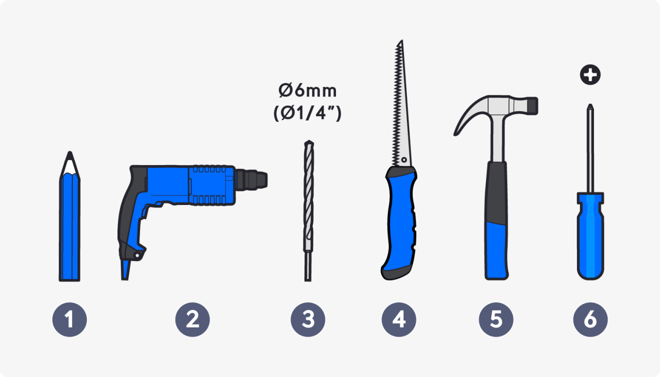
Ø6mm
(Ø1/4")
1
2
3
4
5
6

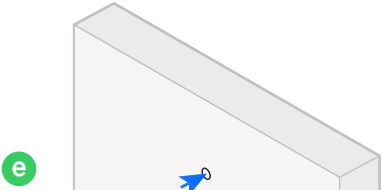

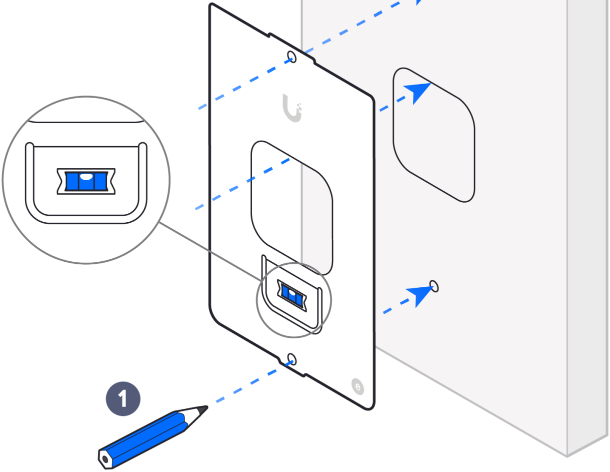

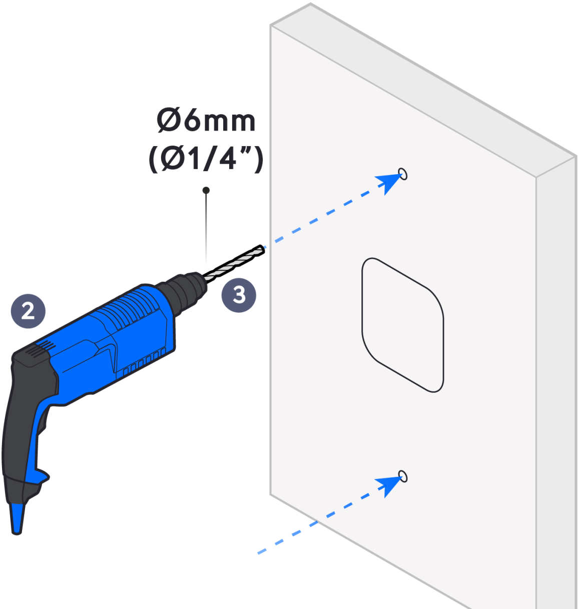

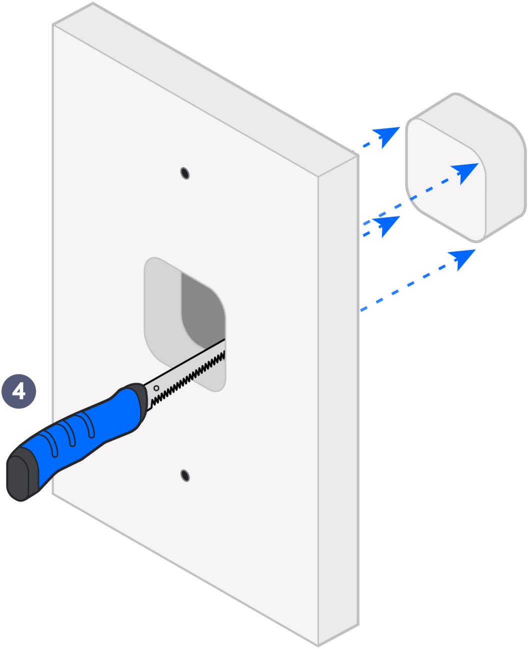

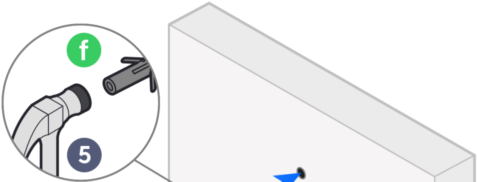

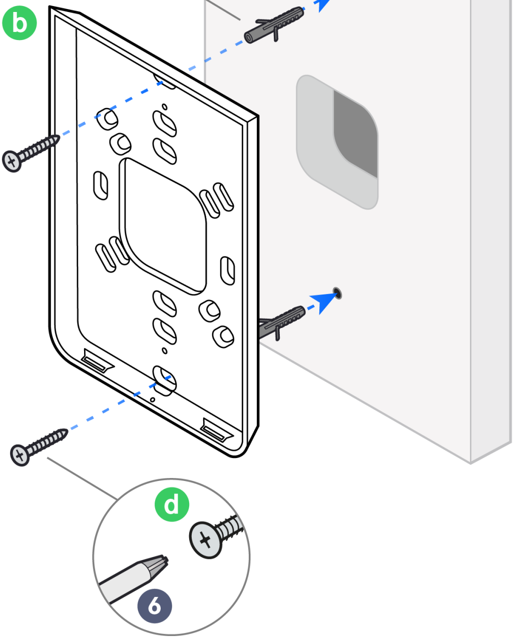

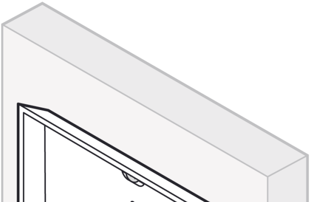

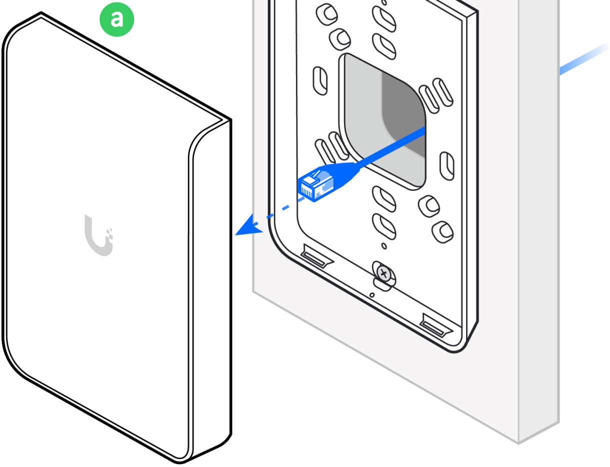

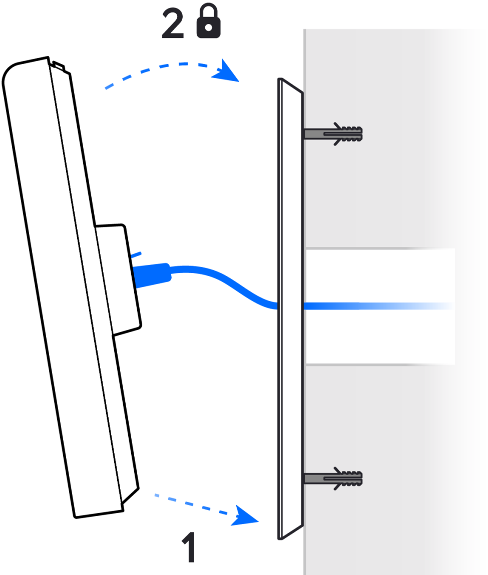

2

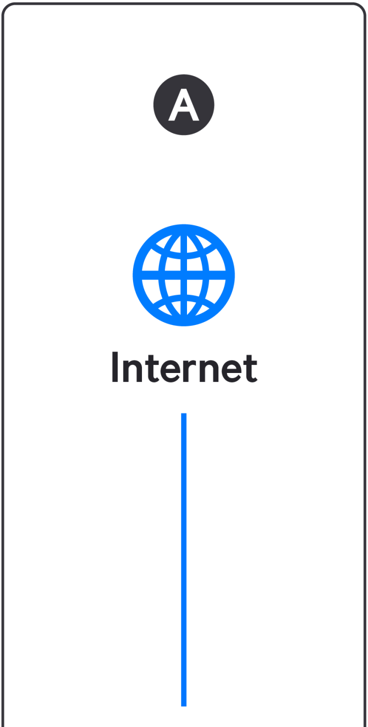

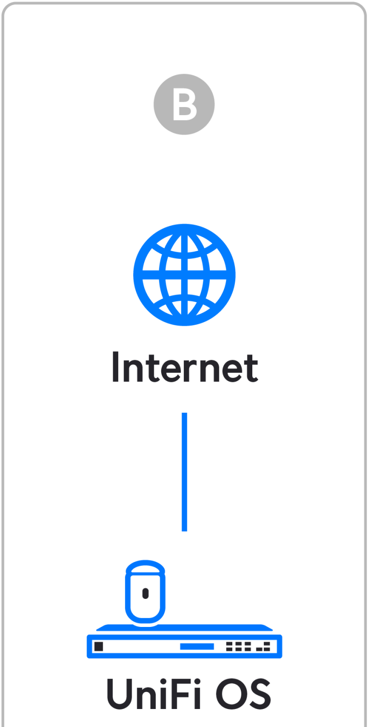
B
Internet
UniFi OS

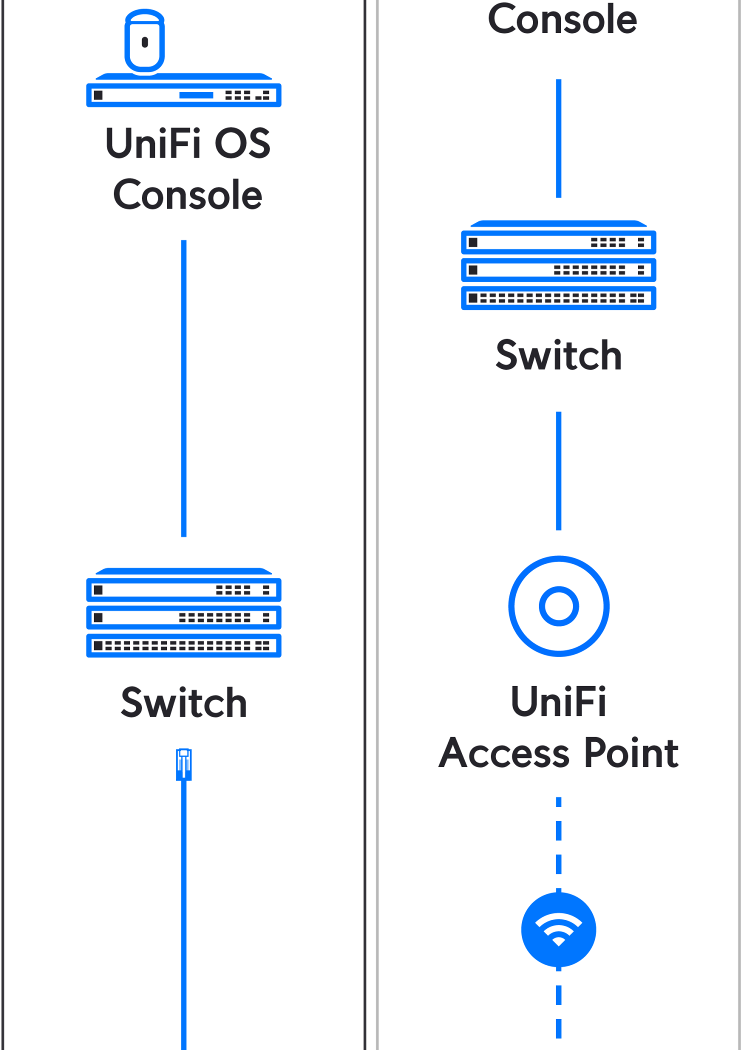
UniFi OS
Console
Switch
Console
Switch
UniFi
Access Point

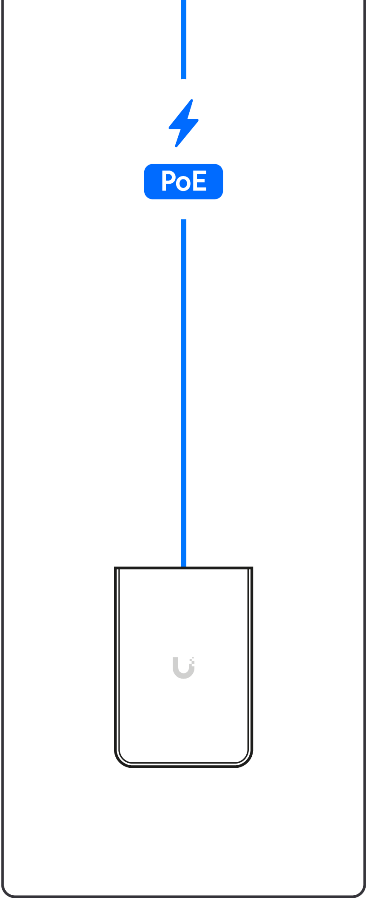

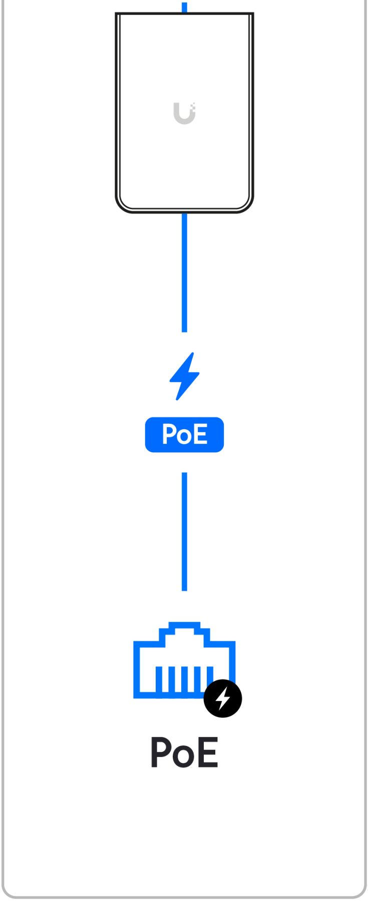

3

Download on the App Store

GET IT ON Google Play

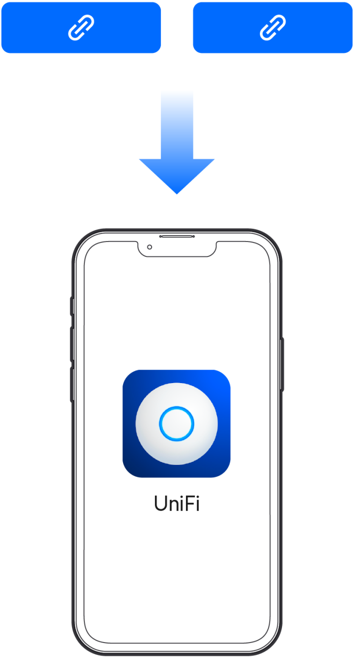

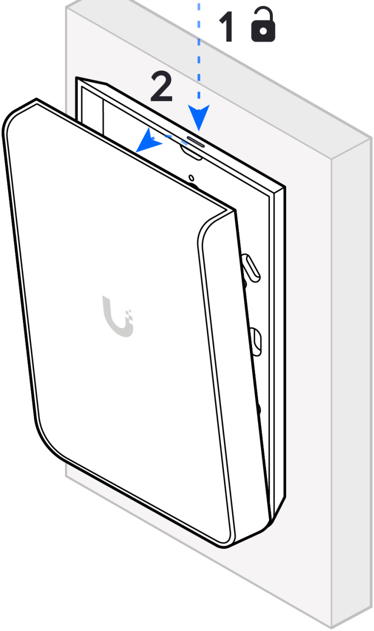

If you need further assistance, visit our Help Center or contact Ubiquiti Support.

©2020-2021 Ubiquiti Inc. All rights reserved. Ubiquiti, Ubiquiti Networks, the Ubiquiti U logo, UniFi, and UniFi Network are trademarks or registered trademarks of Ubiquiti Inc. in the United States and in other countries. Apple and the Apple logo are trademarks of Apple Inc., registered in the U.S. and other countries. App Store is a service mark of Apple Inc., registered in the U.S. and other countries. Android, Google, Google Play, the Google Play logo are trademarks of Google LLC. All other trademarks are the property of their respective owners.